31 July 2024

Technical Data

Product	Motor
Letrika P/N	**IM0145**
Voltage	24 V
Power	2.2 kW
OEM P/N	11.216.257
MAHLE P/N	**MM 151**
Description	AMJ5730
No. of revolutions	2,700/min
Rotation	⇐
S1	
S2	1.2 min
S3	5 %ED
Mass	6.7 kg
Flange	Transport
Termo protection	No
Ventilation	No
Notes	Hydraulics
	Insulated ground
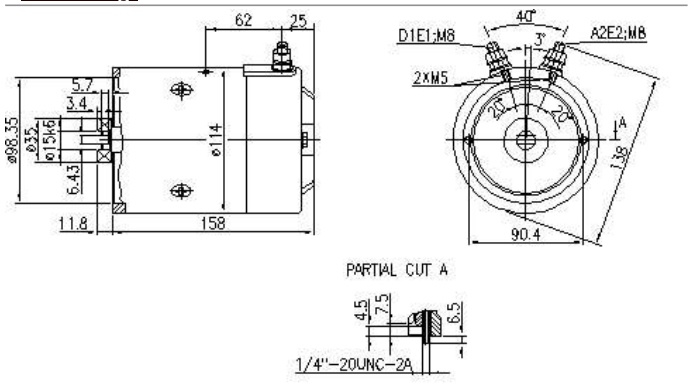
Click to enlarge